Data Sheet

Article number: 29560304465235
Description: Shaft mounted gear
A312S-44,6-P90B5

Measures

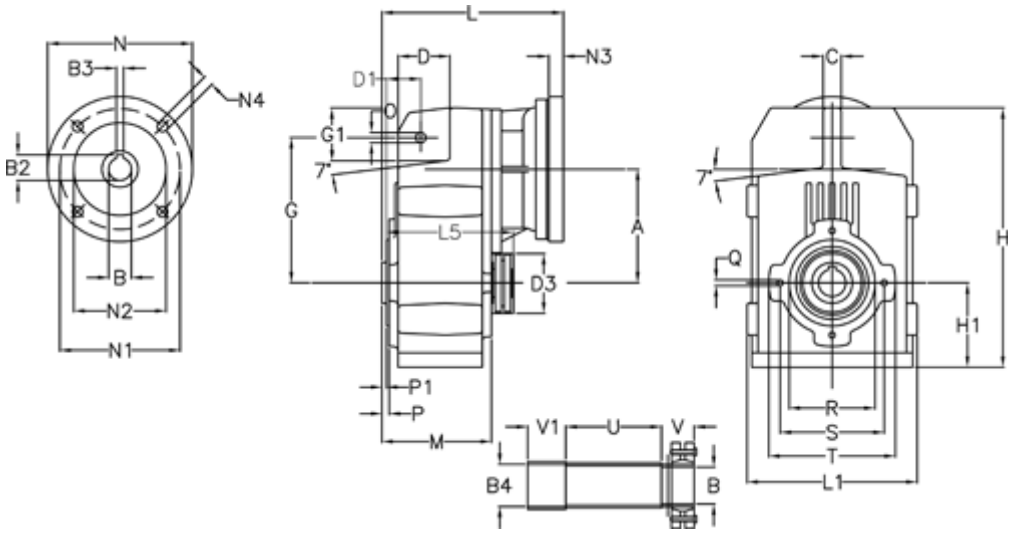

A = 150.50	D1 = 54.0	l5 = 180.0	P1 = 3.5	V1 = 42
B = 36	d3 = 90	M = 125.0	Q = M10x17	
B1 = 24	G = 170	N = 200	R = 110	
B2 = 27.3	G1 = 84.0	N1 = 165	S = 130	
B3 = 8	H = 326.0	N2 = 130	T = 150	
B4 = 38	H1 = 102.0	N4 = M10x20	Tightening torque N m = 14.5	
C = 20	L = 245.0	O = 13	U = 73.0	
D = 68.0	L1 = 210	P = 6.5	V = 42	

Product drawings and brochures of any kind may contain errors for which Brd. Klee A/S cannot be liable.